5. Disassembly and Reassembly

5.1 General Precautions on Disassembly

When you disassemble and reassemble components, you must use extreme caution. The close proximity of cables to moving parts makes proper routing a must.
If components are removed, any cables disturbed by the procedure must be restored as close as possible to their original positions. Before removing any component from the machine, note the cable routing that will be affected.

Whenever servicing the machine, you must perform as follows:

1. Check to verify that documents are not stored in memory.
2. Be sure to remove the toner cartridge before you disassemble parts.
3. Unplug the power cord.
4. Use a flat and clean surface.
5. Replace only with authorized components.
6. Do not force plastic-material components.
7. Make sure all components are in their proper position.

Releasing Plastic Latches

Many of the parts are held in place with plastic latches. The latches break easily; release them carefully.
To remove such parts, press the hook end of the latch away from the part to which it is latched.

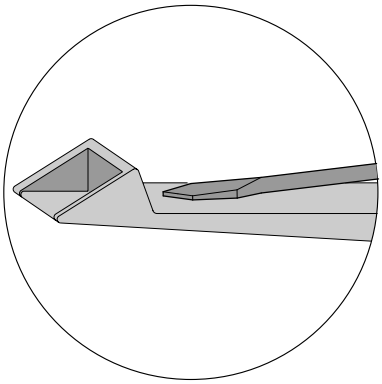

5.2 White Roller Ass,y

1. Open the OPE Unit.

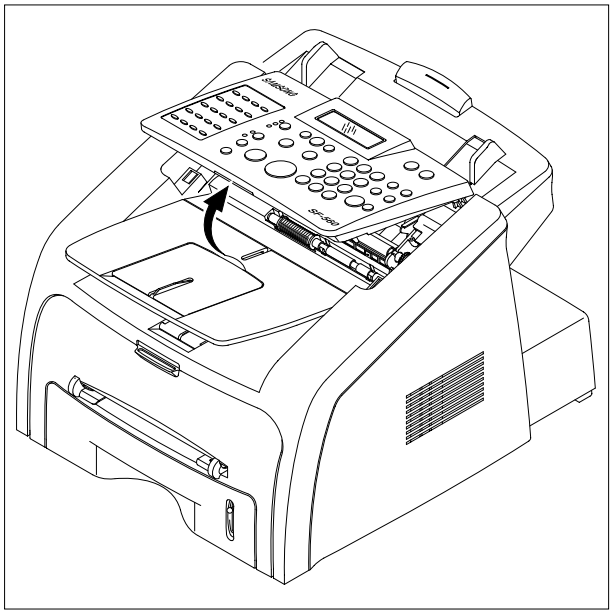

2. Push the Bushing on RH end of the roller slightly inward, then rotate it until it reaches the slot as shown below. Then lift the roller out.

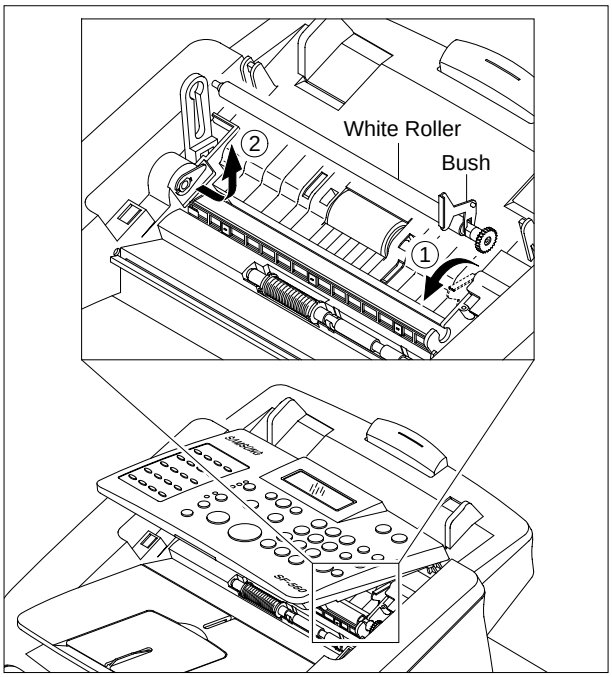

Note: Check the roller for any dirt. Clean with a soft cloth dampened with water.
If the roller is heavily worn replace it with a new one.

5.3 Rear Cover

1. Remove the four screws securing the Rear Cover and remove it, as shown below.

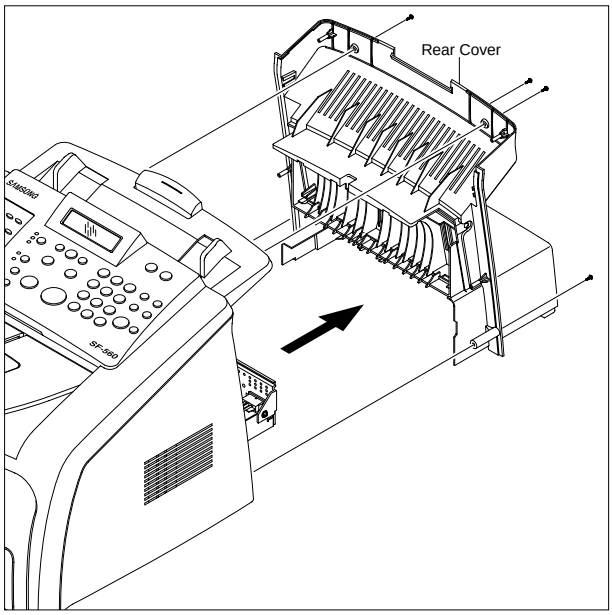

2. Unlatch the Face up Cover Securing the Rear Cover, as shown below. Then lift the Face up Cover out.

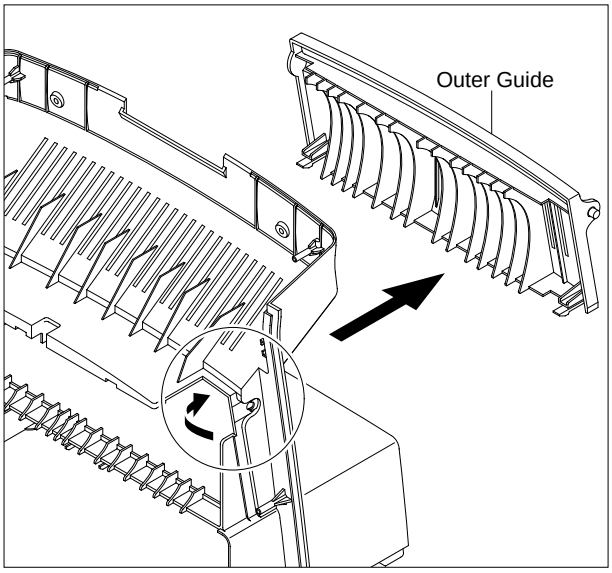

5.4 Side Cover LH

1. Before you remove the Side Cover LH, you should remove:
   - Remove handset and cradle.

2. Release the latches from Frame Ass,y in the direction of the arrow, as shown below. Take care to disconnect speaker harness.

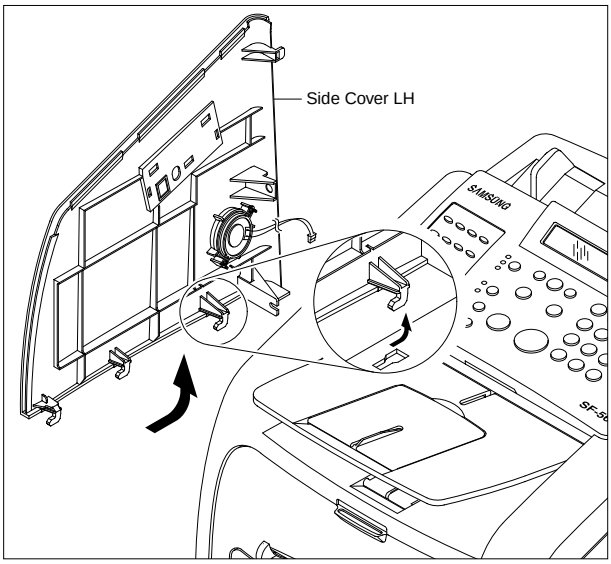

3. If necessary, remove the two screws securing the Speaker and remove it.

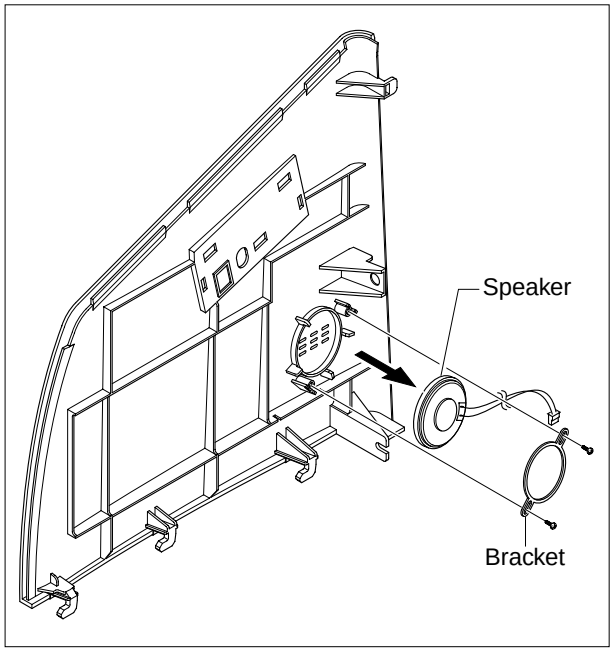

5.5 Side Cover RH

1. Before you remove the Side Cover RH, you should remove: - Rear Cover (see section 5-3)

2. Release the latches from Frame Ass'y in the direction of the arrow, as shown below.

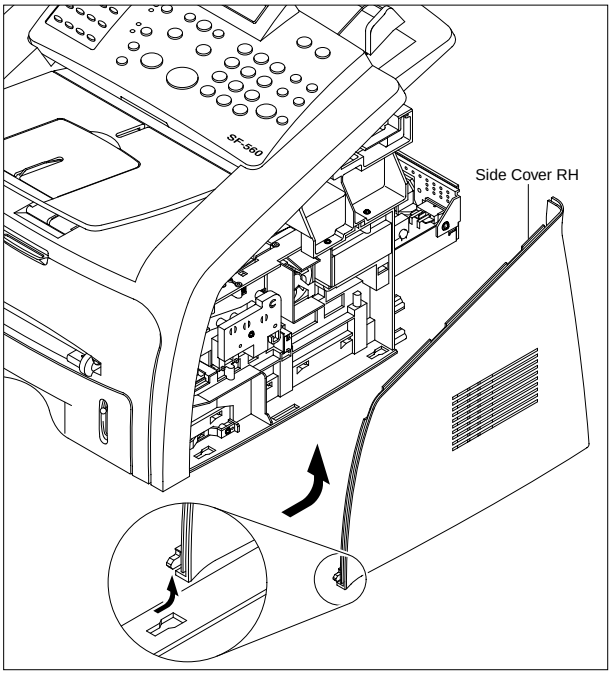

5.6 OPE Unit

1. Before you remove the OPE Unit, you should remove:
   - Rear Cover (see section 5-3)

2. Unplug the OPE connector from the Main PBA and Scan Motor Harness, as shown below.
   Then remove the two screws securing the Ground Cable and remove it. Note the position of the bronze earth plate.

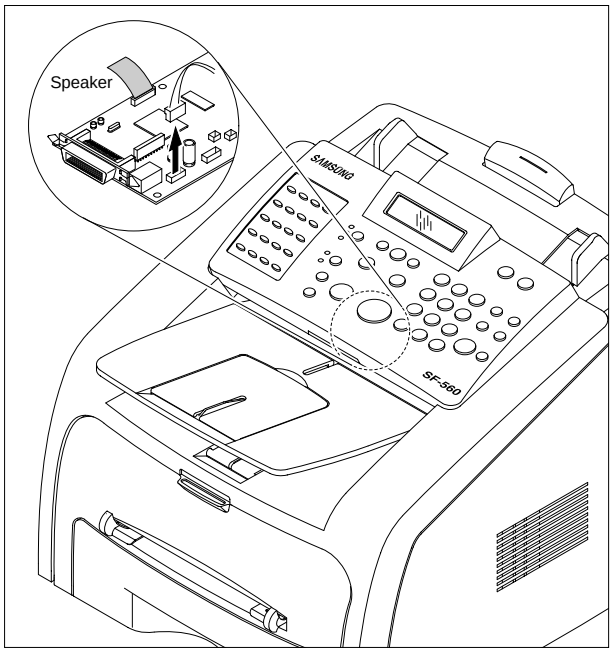

3. Open the OPE and release the latch from Holder, as shown below.

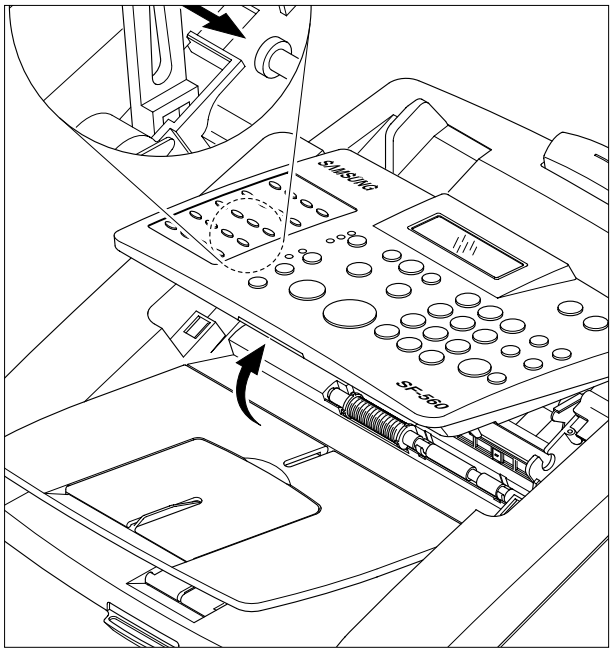

4. Carefully release the latches from Top Cover in the direction of the arrow, as shown below.

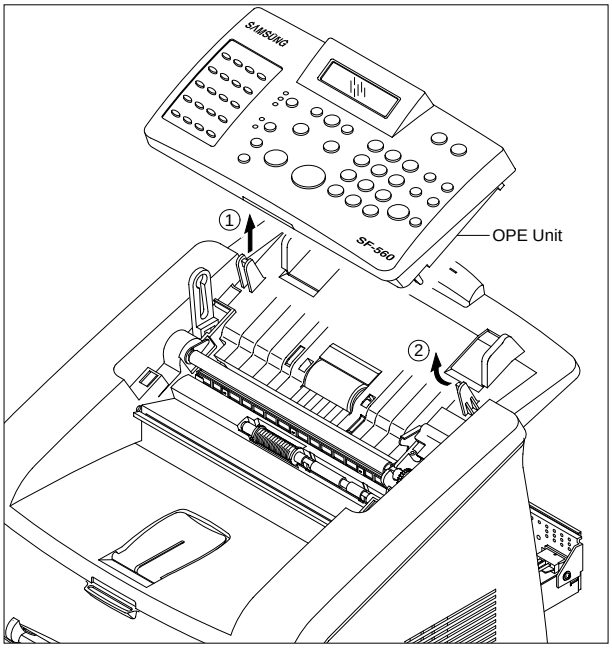

5. Remove the two screws securing the Scan Lower Ass'y and remove it.

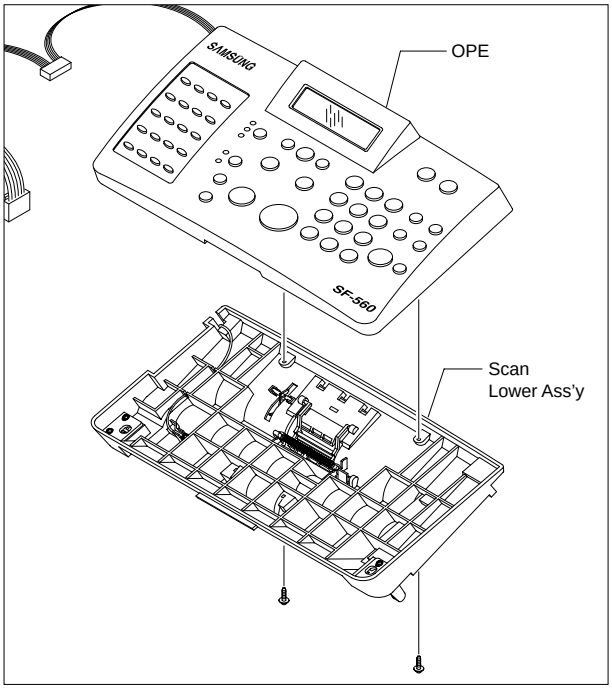

6. Remove the seven screws securing the OPE PBA and remove it.

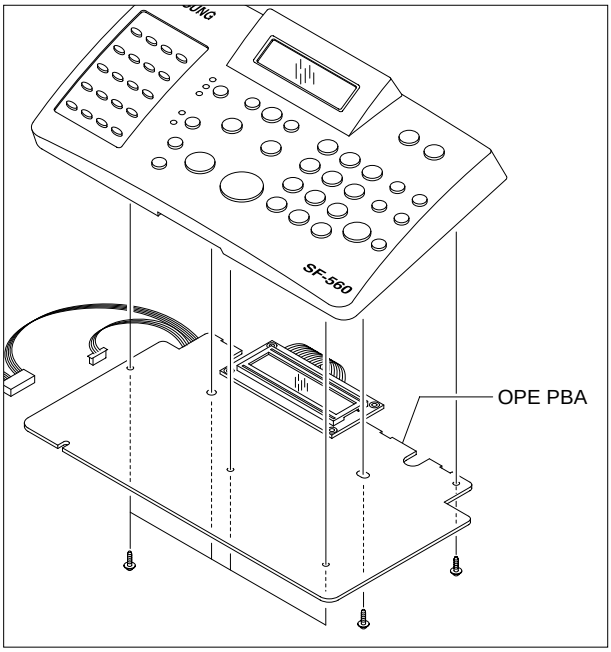

7. Remove the Contact Rubber from the OPE Cover.

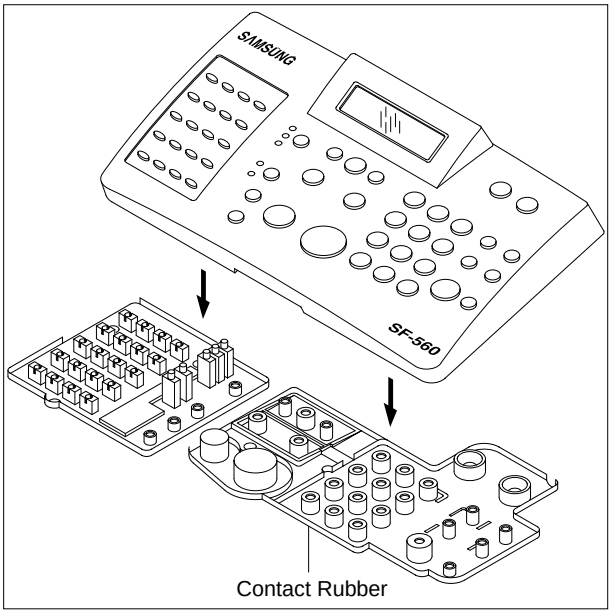

8. Remove the Key Pad from the OPE Cover.

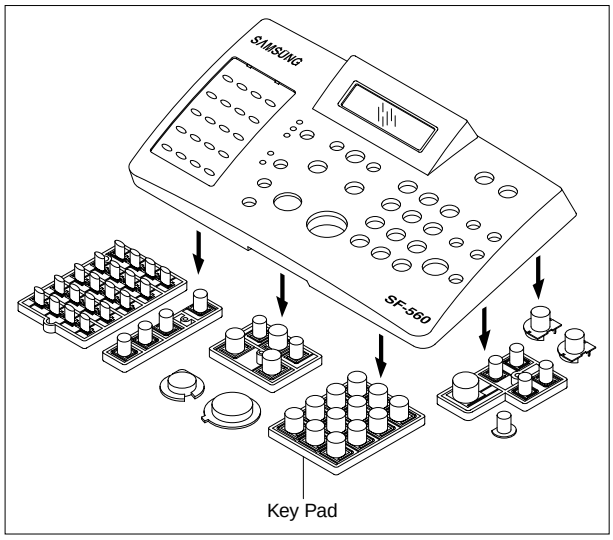

5.7 ADF Rubber Pad

1. Before you remove the ADF Rubber Pad, you should remove:
   - Rear Cover (see section 5-3)
   - OPE Unit (see section 5-6)

2. Insert a flat-blade screwdriver into the slot as shown below, and release the latches.
   Take out the Rubber Holder and the Rubber Pad.

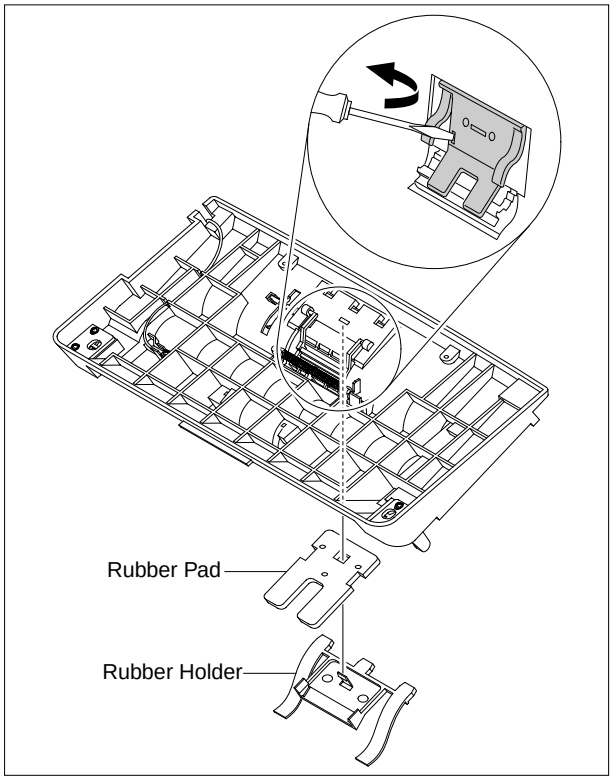

Note:

- *When you reassemble the Rubber Pad, be sure that the Rubber Pad and Holder fit into the Guide Boss and the Holder latches fit into the corresponding holes. Then push firmly until it clicks.*

- *Clean the surface of the Rubber Pad with ethyl alcohol. After wiping it, be sure to dry it. Check the rubber for wear. If the wear reaches 1/2 it's original thickness, replace it with a new one.*

5.8 CIS

1. Before you remove the CIS, you should remove:
   - White Roller Ass'y (see section 5-2)
   - Rear Cover (see section 5-3)

2. Unplug the CIS connector from the Main PBA. (CN14)

3. Unlatch the CIS using a flat-blade screwdriver and release it, as shown below. Disconnect harness from CIS unit.

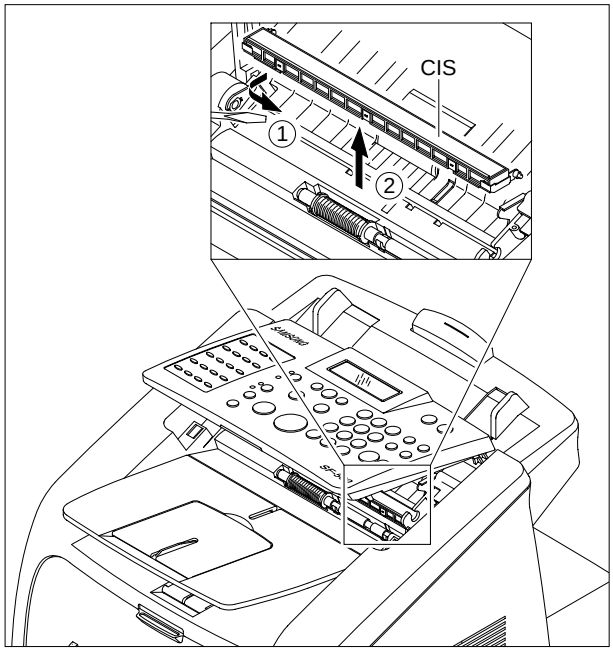

5.9 Exit Roller

1. Open the OPE Unit.

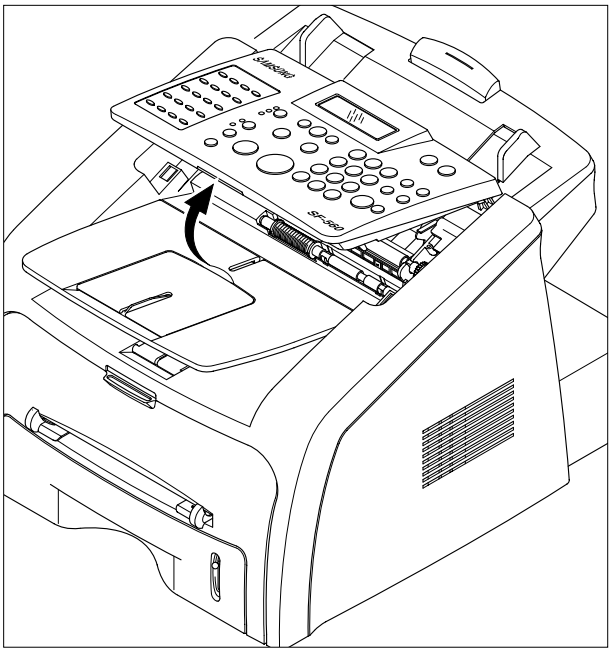

2. Pull up the Exit Roller using a flat-blade screwdriver and remove it, as shown below.

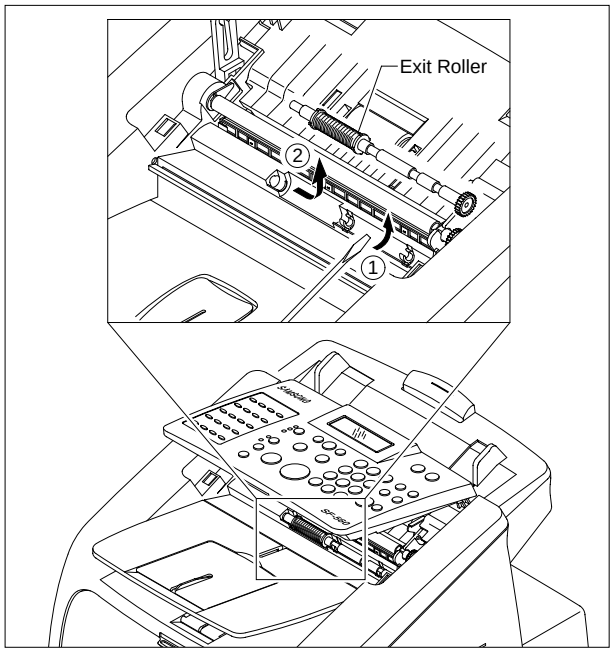

5.10 Front Cover Ass'y

1. Take out the Cassette.

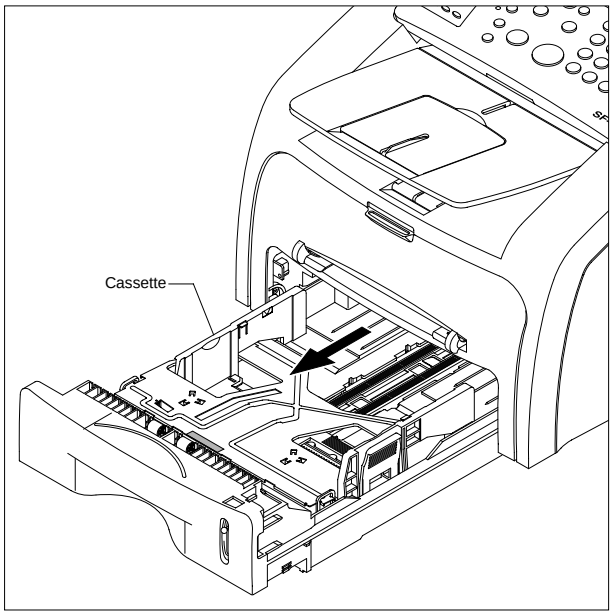

2. Open the Front Cover.

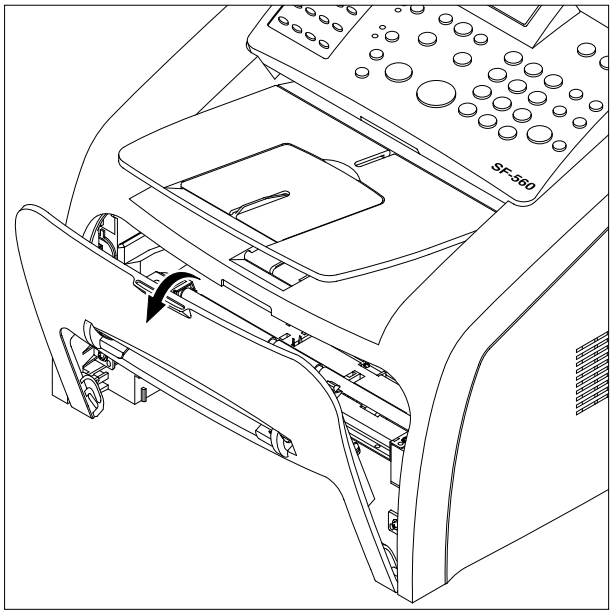

3. Unlatch the Front Cover from the Frame Ass'y. Then remove the Front Cover, as shown below.

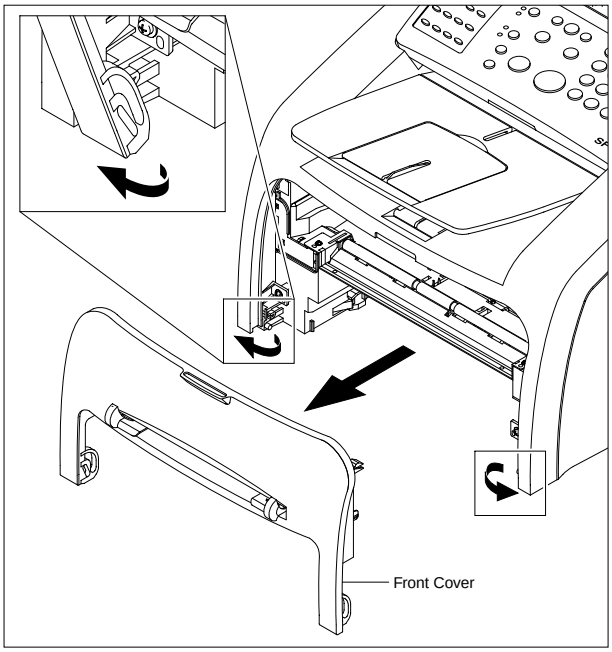

5.11 Scan Ass'y

1. Before you remove the Scan Ass'y, you should remove:
   - Rear Cover (see section 5-3)
   - Side Cover LH (see section 5-4)
   - Side Cover RH (see section 5-5)
   - Front Cover (see section 5-10)

2. Unplug the three connectors (OPE, CIS, scan motor) from the Main PBA. Then remove the two Ground Cables, as shown below.

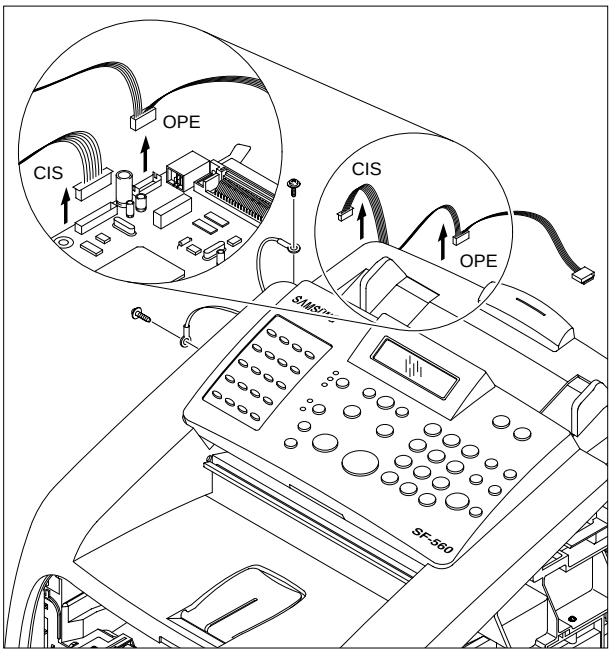

3. Remove the four screws securing the Top Cover and remove the Scan Ass'y, as shown below.

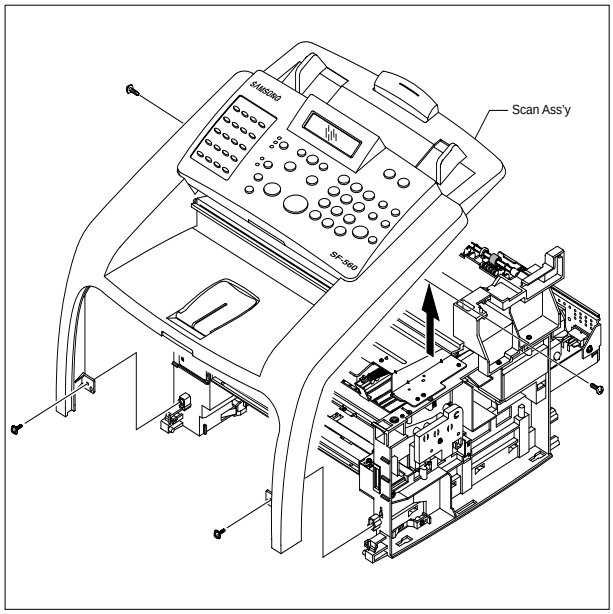

5.12 Scan Motor Ass'y

1. Before you remove the Scan Motor Ass'y, you should remove:
   - Rear Cover (see section 5-3)
   - Side Cover LH (see section 5-4)
   - Side Cover RH (see section 5-5)
   - OPE Unit (see section 5.6)
   - Front Cover (see section 5-10)
   - Scan Ass'y (see section 5-11)

2. Open the OPE Unit.

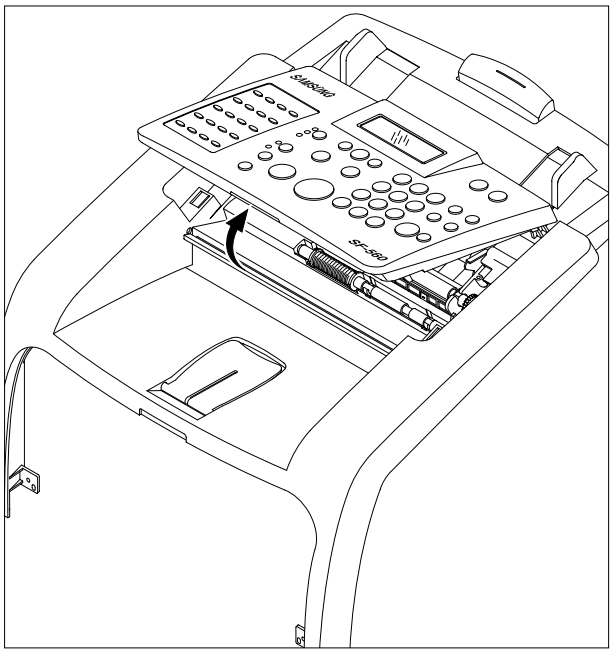

3. Remove the three silver screws securing the Scan Motor Ass'y and remove it.

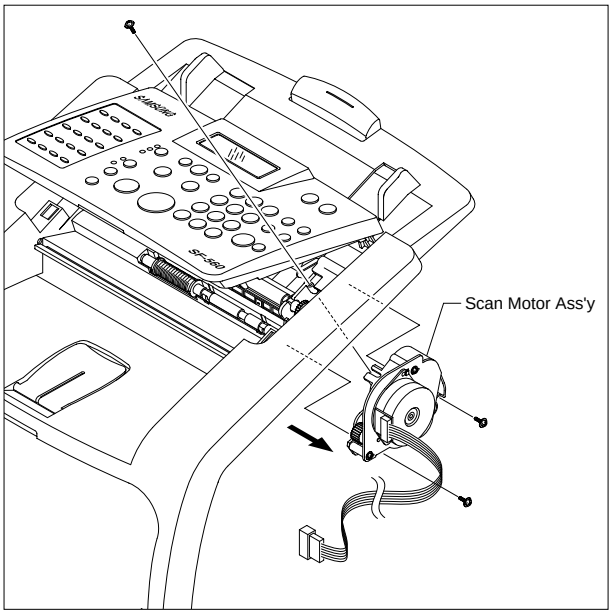

4. If necessary, remove the one screw securing the Scan Motor and release the latches from Motor Bracket in the direction of the arrow, as shown below.

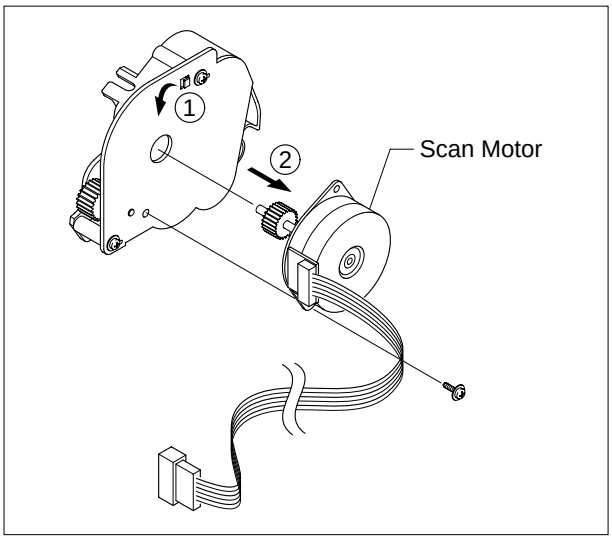

5.13 ADF Roller

1. Before you remove the ADF Roller, you should remove:
   - Rear Cover (see section 5-3)
   - Side Cover LH (see section 5-4)
   - Side Cover RH (see section 5-5)
   - Front Cover (see section 5-10)
   - Scan Ass'y (see section 5-11)
   - Scan Motor Ass'y (see chapter 5-12)

2. Carefully release the ADF Gear from the ADF Roller, as shown below.

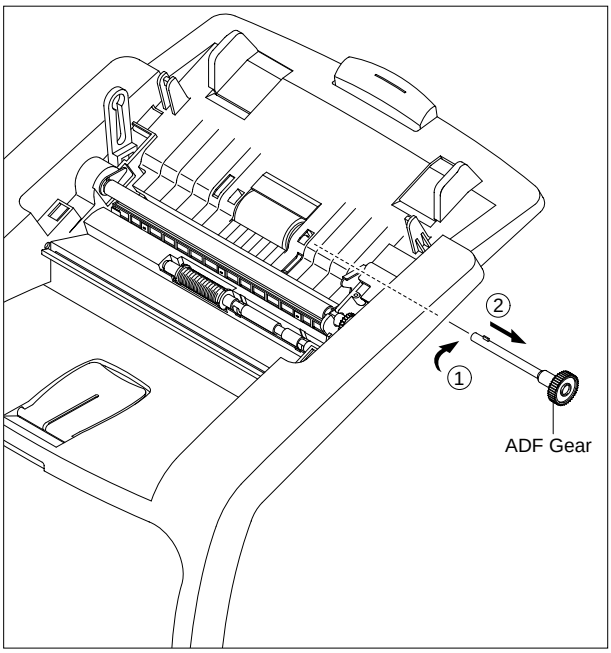

3. Carefully release the ADF Roller from Top Cover in the direction of the arrow, as shown below.

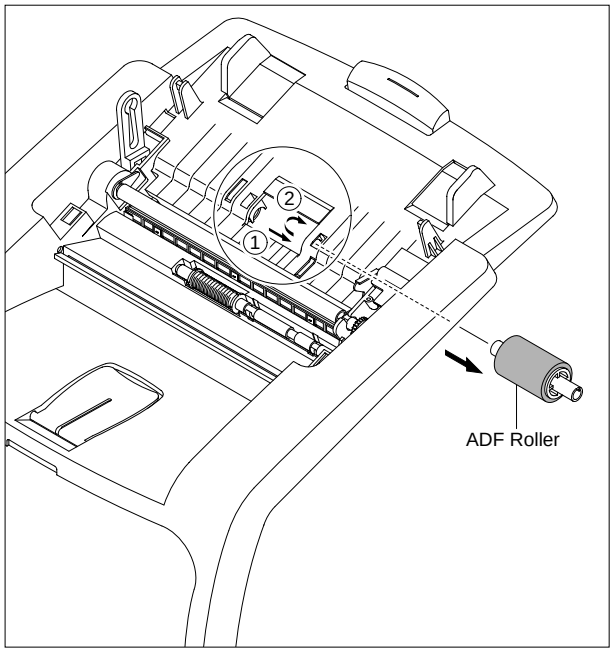

5.14 Sub Hook PBA

1. Before you remove the Sub Hook PBA, you should remove:
   - Rear Cover (see section 5-3)
   - Side Cover LH (see section 5-4)

2. Unplug the one connector from the Sub Hook PBA, as shown below.

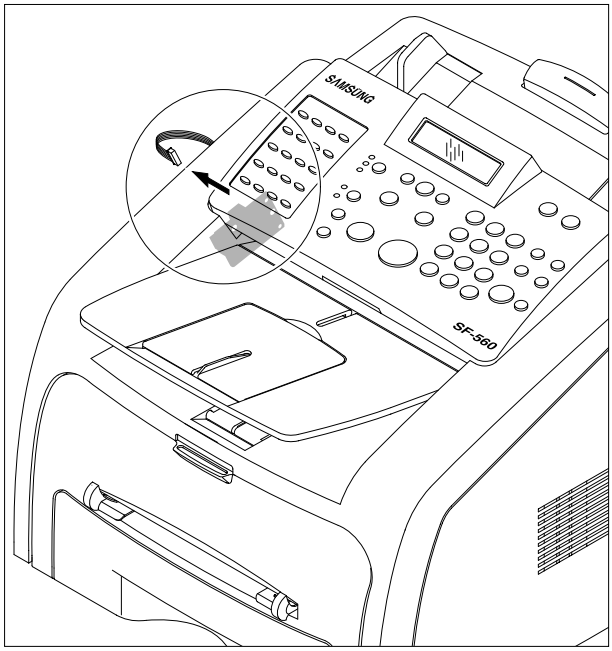

3. Remove the two screws securing the Sub Hook PBA and remove it.

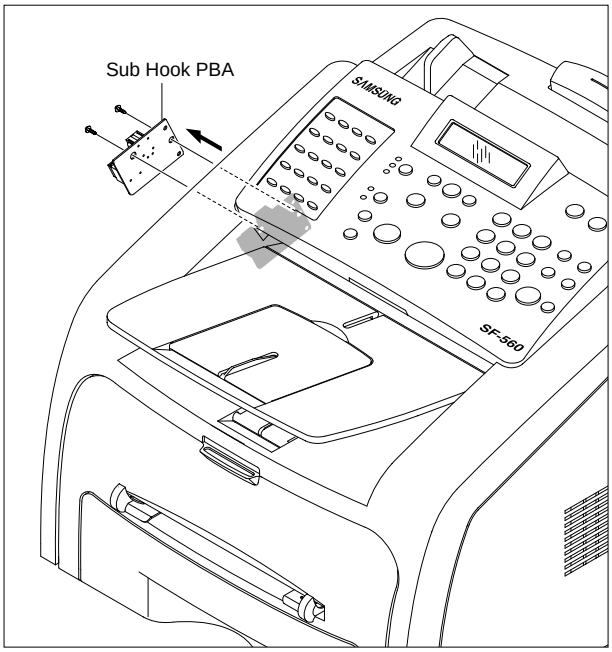

5.15 Drive Ass'y

1. Before you remove the Drive Ass'y, you should remove:
   - Rear Cover (see section 5-3)
   - Side Cover LH (see section 5-4)

Note : When re-fitting the Drive Ass'y tighten the screws in the order that they are numbered on the base plate.

2. Remove the six screws securing the Drive Ass'y and remove it. Then unplug the one connector from the Drive Motor, as shown below.

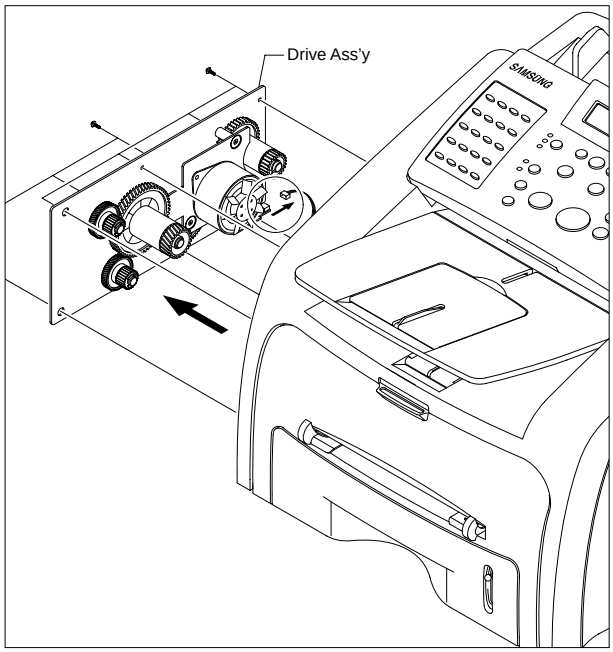

5.16 DC-Fan

1. Before you remove the Fan, you should remove:
   - Rear Cover (see section 5-3)
   - Side Cover RH (see section 5-5)

2. Unplug the one connector from the SMPS, as shown below. Then take out the Fan.

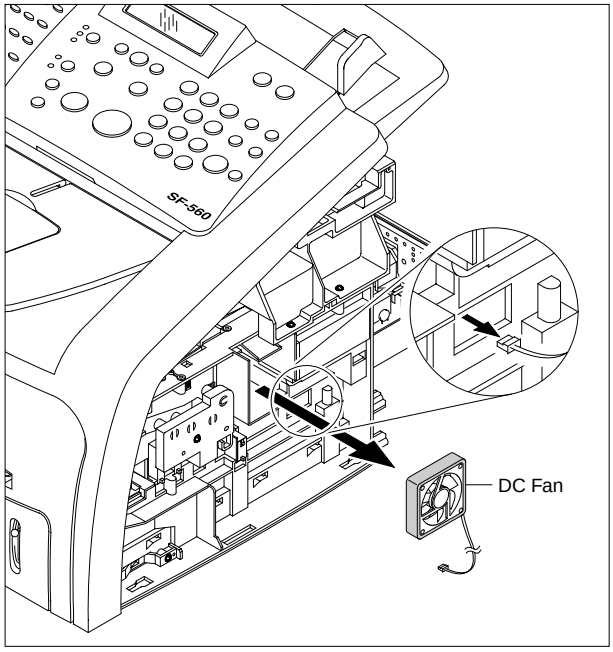

5.17 Exit Cover Ass'y

1. Before you remove the Exit Cover Ass'y, you should remove:
   - Scan Ass'y (see section 5-11)
   - Sub High PBA (see section 5-14)

2. Remove the four screws securing the Exit Cover Ass'y and remove it, as shown below.

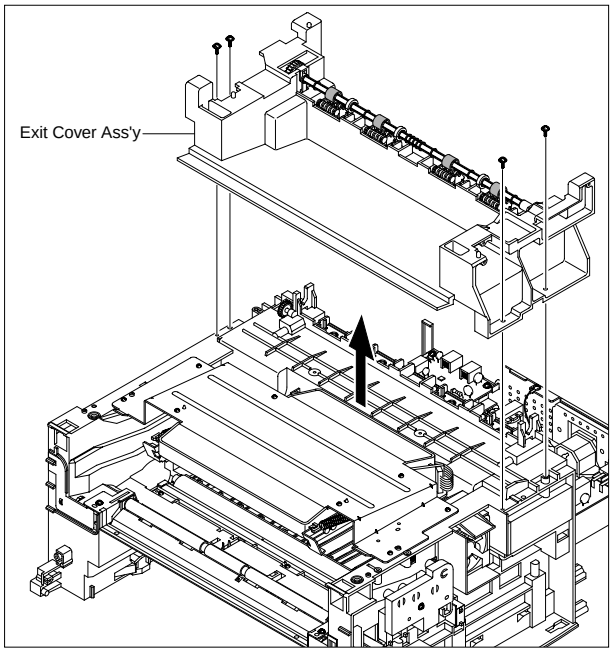

3. Remove the Exit Gear and Bearing using a flat-blade screwdriver, as shown below.
   Then take out the Exit Roller.

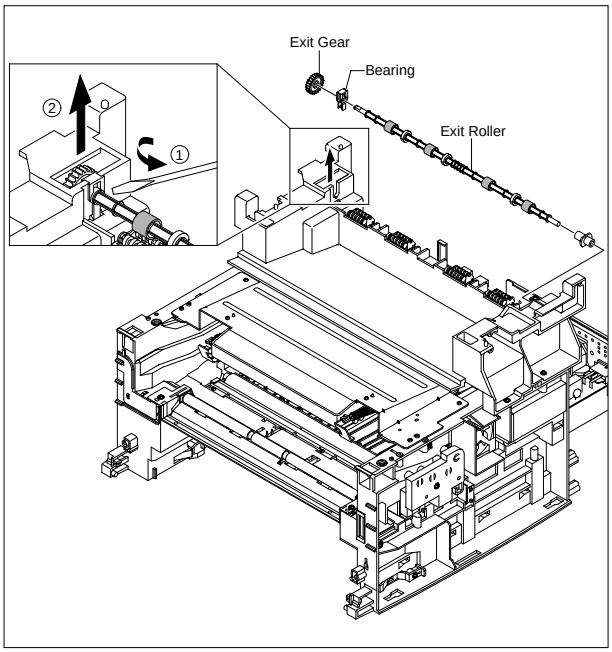

5.18 LSU-Unit

1. Before you remove the LSU, you should remove:
   - Scan Ass'y (see section 5-11)

2. Unplug the two connectors from the LSU, as shown below.

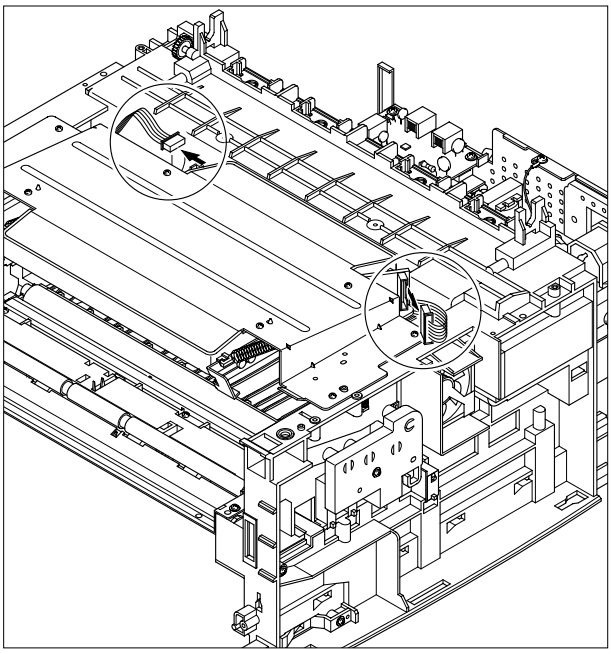

3. Remove the four screws securing the LSU and remove it.

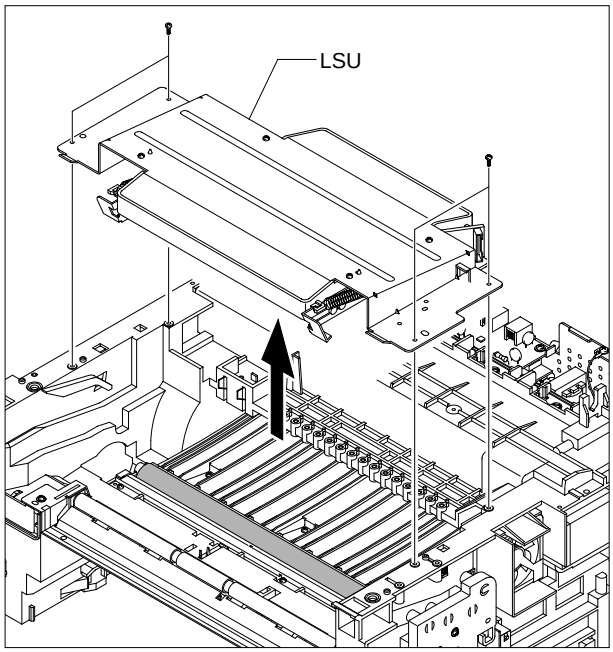

5.19 Engine Shield Ass'y

1. Before you remove the Engine Shield Ass'y, you should remove:
   - Rear Cover (see section 5-3)
   - Side Cover LH (see section 5-4)
   - Side Cover RH (see section 5-5)

2. Remove the twelve screws securing the Engine Shield Ass'y and remove it. Then unplug the all connectors from the SMPS and Main PBA, Main High PBA.

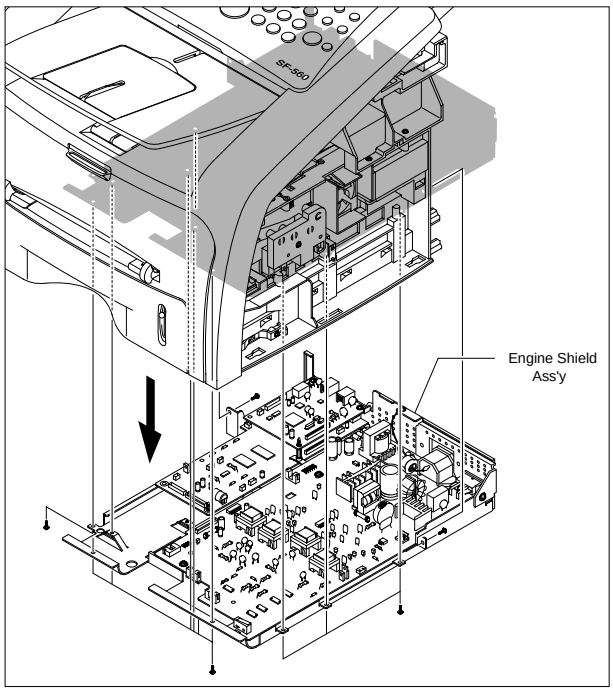

5.20 LIU PBA

1. Before you remove the Main High PBA, you should remove:
   - Engine Shield Ass,y (see section 5-19)

2. Unplug the Flat Cable and one connector, as shown below.

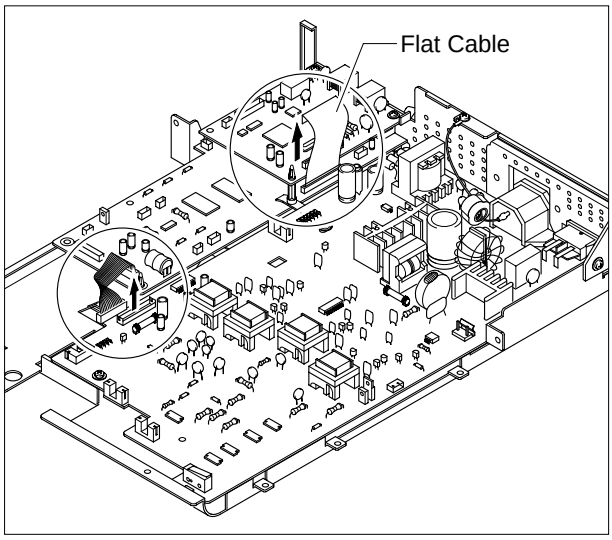

3. Remove the two screws securing the Main High PBA and remove it. Then carefully release the latches from Supporter, as shown below.

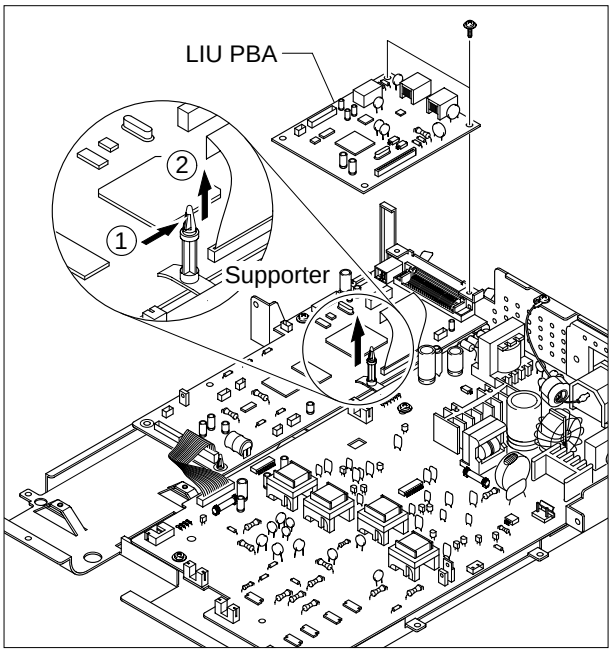

5.21 Main PBA

1. Before you remove the Main PBA, you should remove:
   - Engine Shield Ass,y (see section 5-19)

2. Remove the three screws securing the Main PBA and remove it. Then carefully release the latches from Supporter, as shown below.

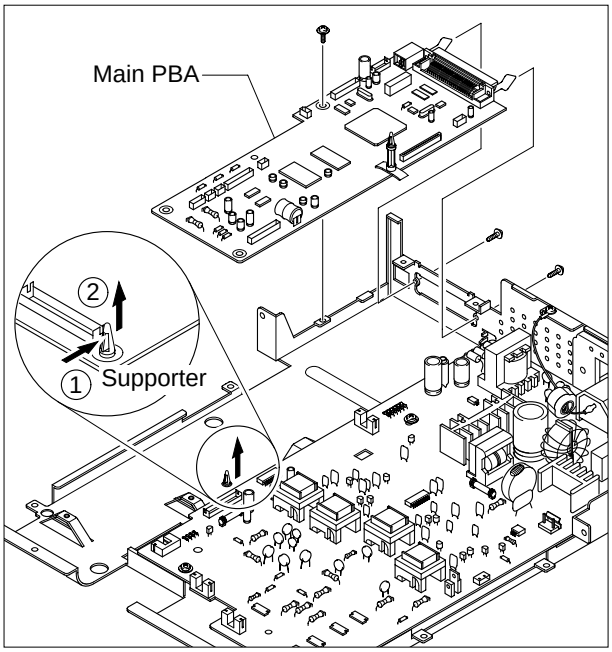

5.22 SMPS

1. Before you remove the SMPS, you should remove:
   - Engine Shield Ass,y (see section 5-19)

2. Remove the three screws securing the Inlet Bracket and remove it.

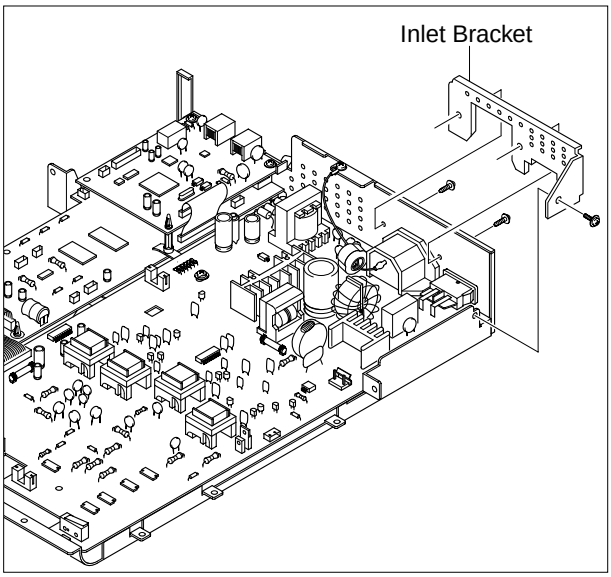

3. Unplug one connector.

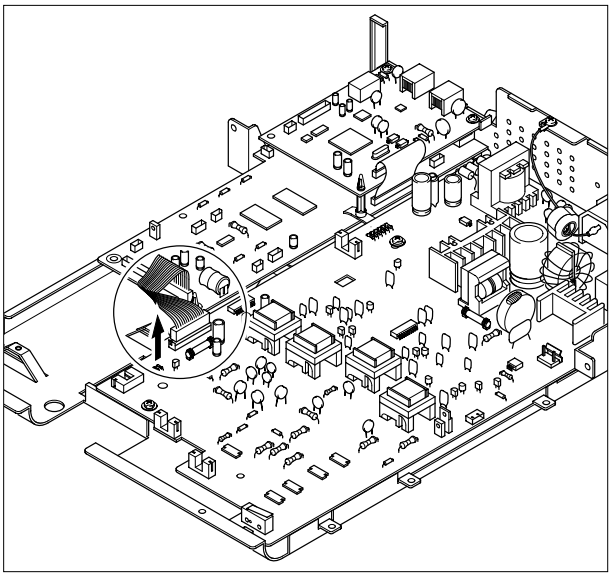

4. Remove the four screws securing the SMPS and remove it. Then Lift the SMPS out, as shown below.

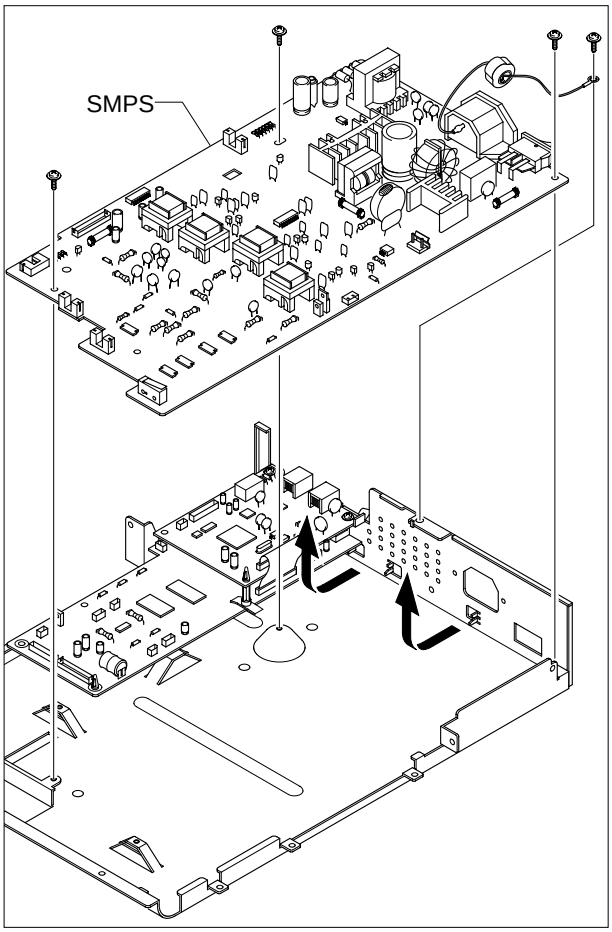

5.23 Fuser Ass'y

1. Before you remove the Fuser Ass'y, you should remove:
   - Engine Shield Ass,y (see section 5-19)

2. Unplug the two connectors from the Main PBA and SMPS, as shown below. Then remove the four screws securing the Fuser Ass'y and remove it.

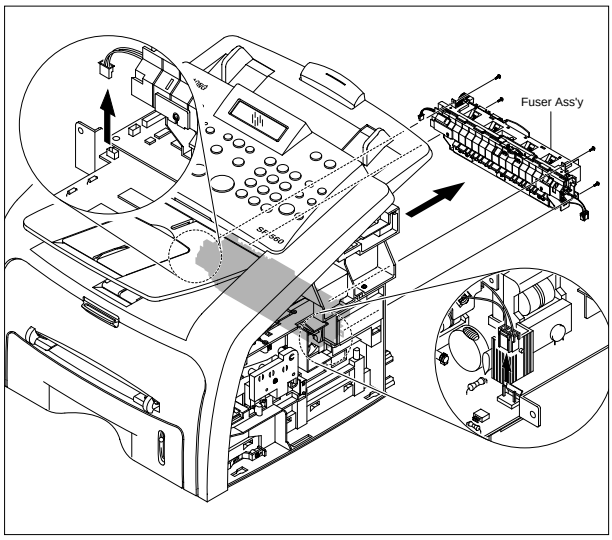

3. Remove the two screws securing the Thermostat. Then lift the Thermostat out.

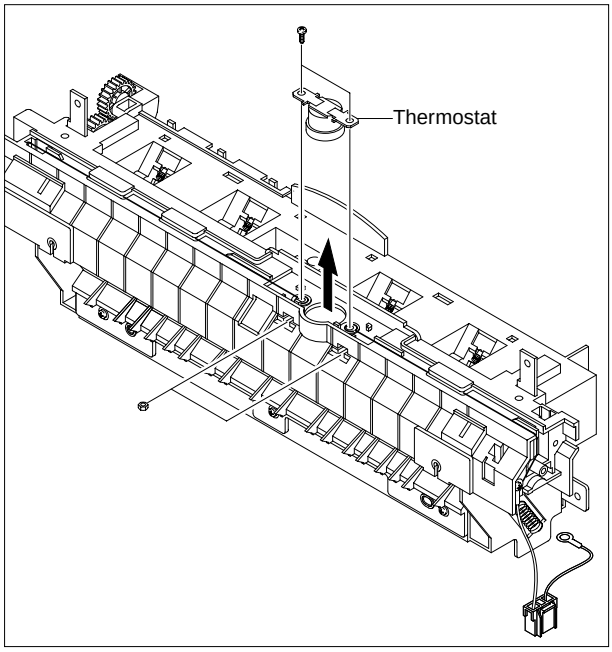

4. Remove the two screws securing the Halogen Lamp. Then take out the Halogen Lamp from the Heat Roller, as shown below.

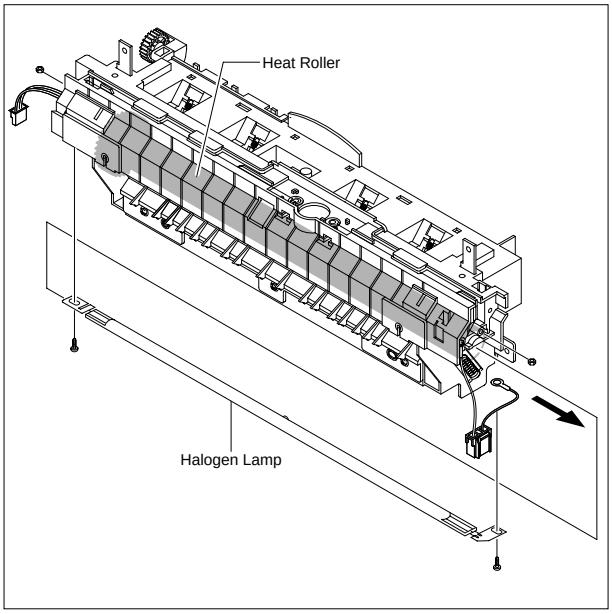

5. Remove one screw securing the Idle Gear and remove it.

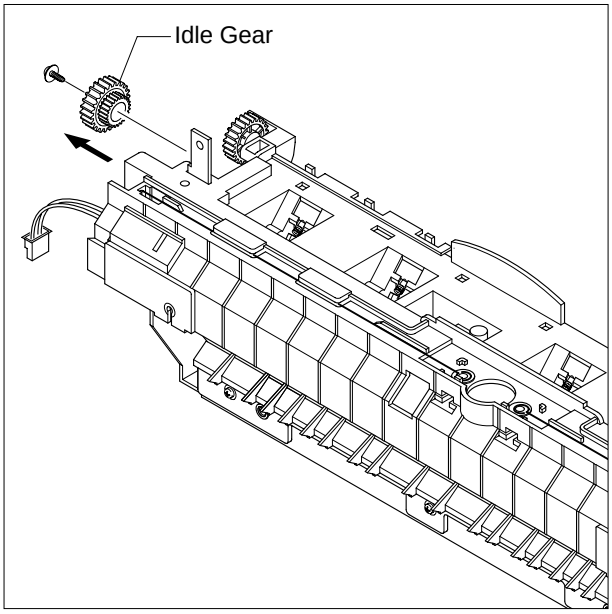

6. Remove the four screws securing the Fuser Cover and remove it, as shown below.

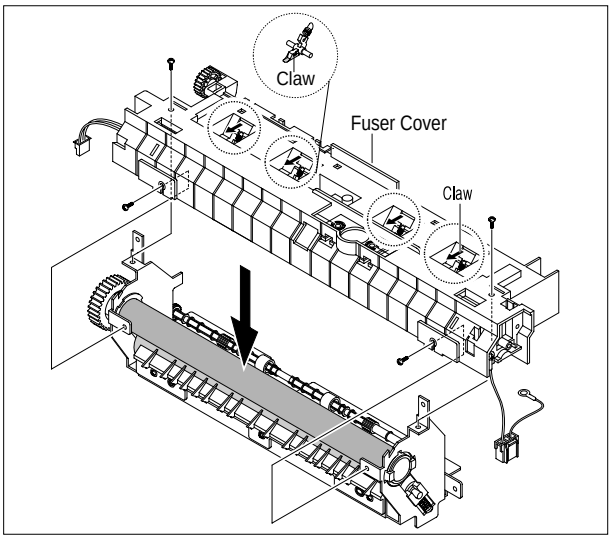

7. Unwrap the Thermister Harness, as shown below.

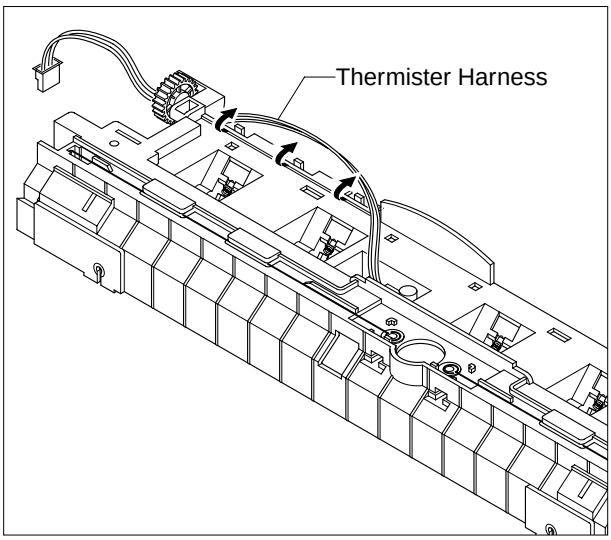

8. Remove the one screw securing the Thermister and remove it, as shown below.

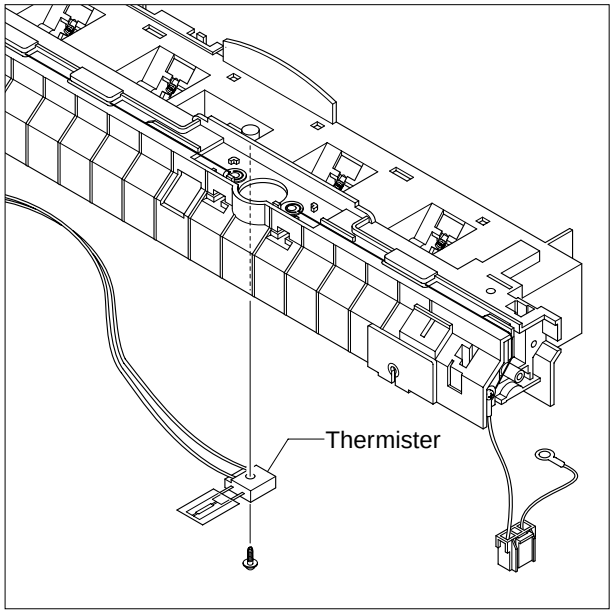

5.24 Transfer Ass'y

1. Before you remove the Transfer Ass'y, you should remove:
   - LSU (see section 5-18)

2. Remove the three screws securing the Transfer Earth and remove it.

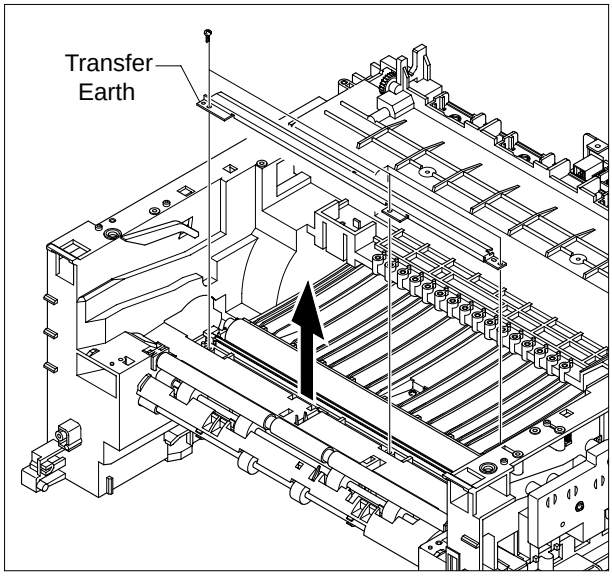

3. Unplug the PTL Holder connector, then remove the PTL Holder and PTL Lens, as shown below.

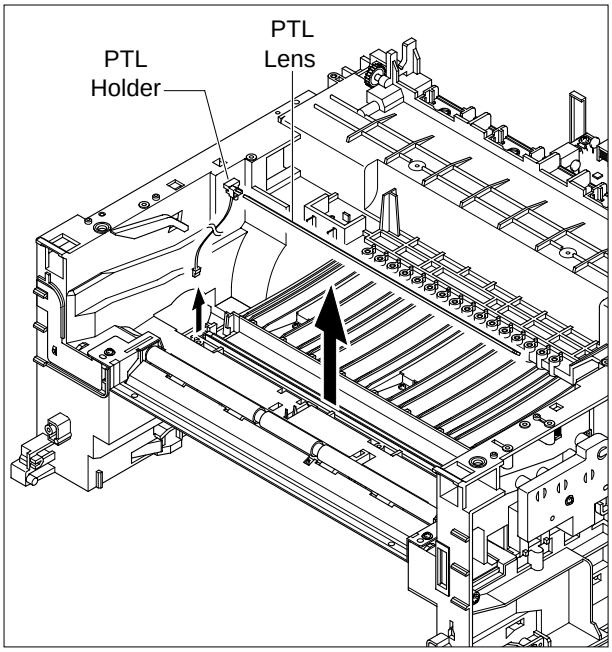

4. Release the frame latch at the RH side of the Transfer roller and lift the roller out. Release the latch on each bush and lift them out.

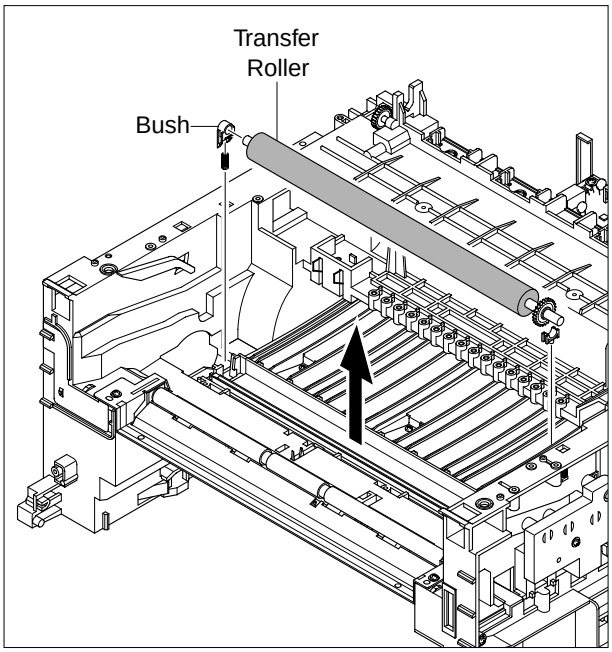

5.25 Feed Ass'y

1. Before you remove the Feed Ass'y, you should remove:
   - Scan Ass'y (see section 5-11)
   - Drive Ass'y (see section 5-15)
   - LSU (see section 5-18)

2. Remove the two screws securing the Paper Guide and remove it.

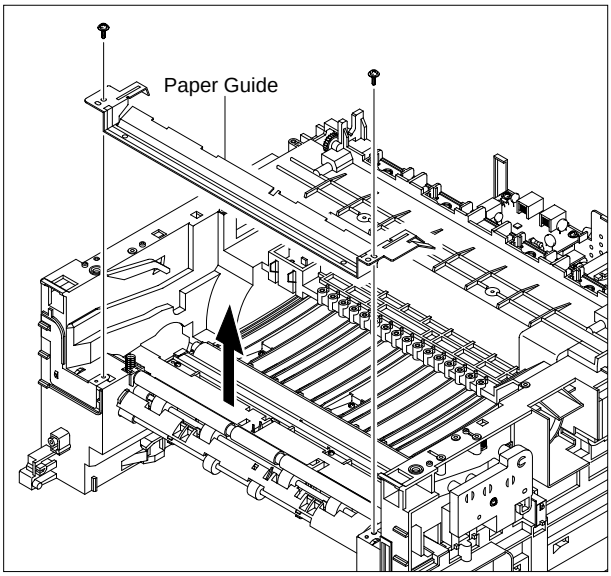

3. Pull up the Feed Idle Bush and Feed Idle Shaft, as shown below.

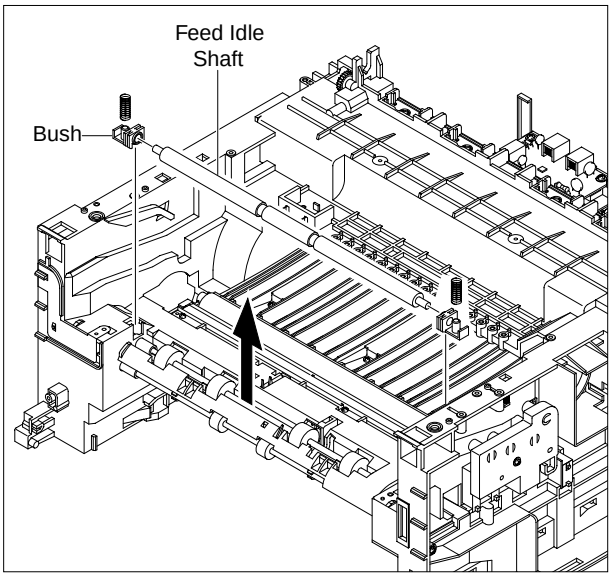

4. Remove the three screws securing the Feed Bracket and remove it.

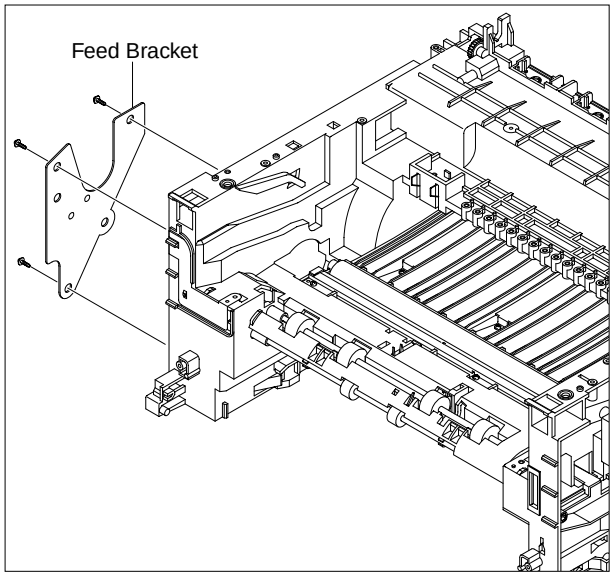

5. Remove the Idle Gear and Feed Gear2.

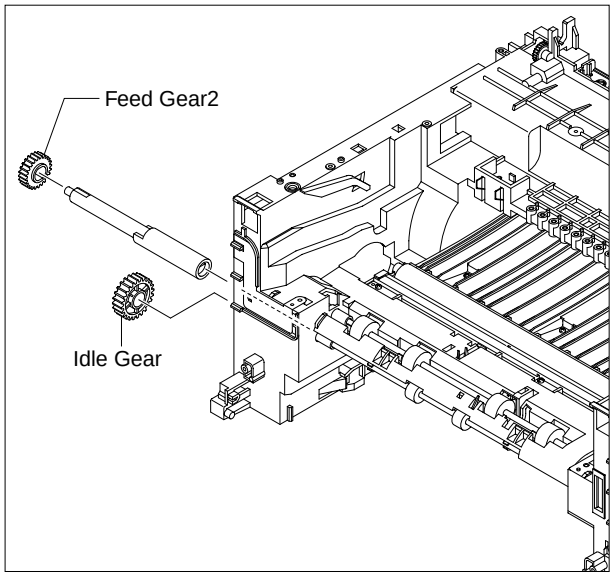

6. Remove the Feed Gear1 Ass'y.

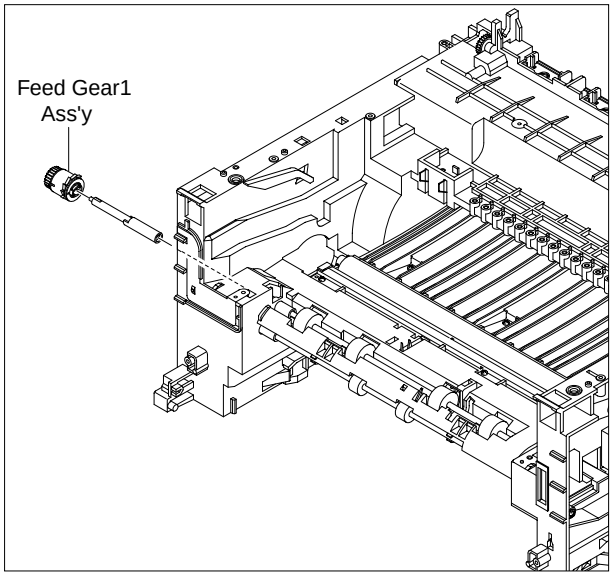

7. Pull up the Feed Roller and Feed Roller1.

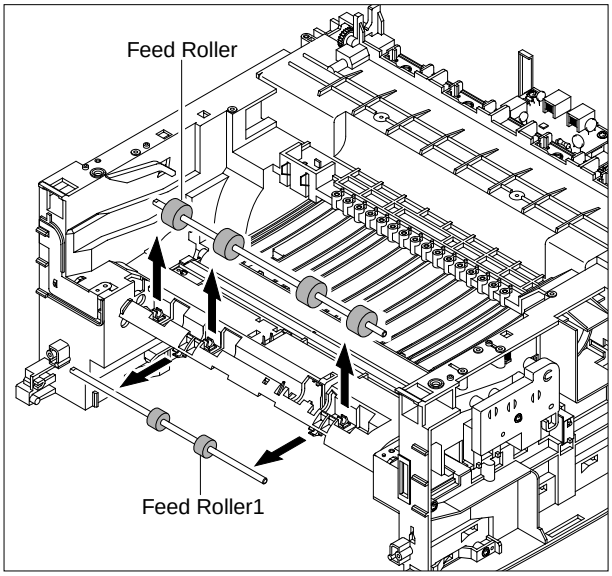

5.26 Pick up Ass'y

1. Before you remove the Pick up Ass'y, you should remove:
   - Scan Ass'y (see section 5-11)
   - Drive Ass'y (see section 5-15)
   - LSU (see section 5-18)
   - Engine Shield Ass,y (see section 5-19)

2. Remove the Pick up Gear Ass,y.

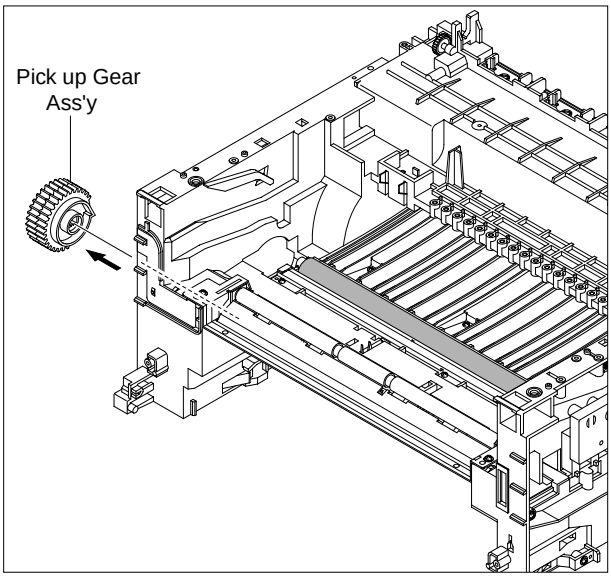

3. Take out the Pick up Ass'y, as shown below.

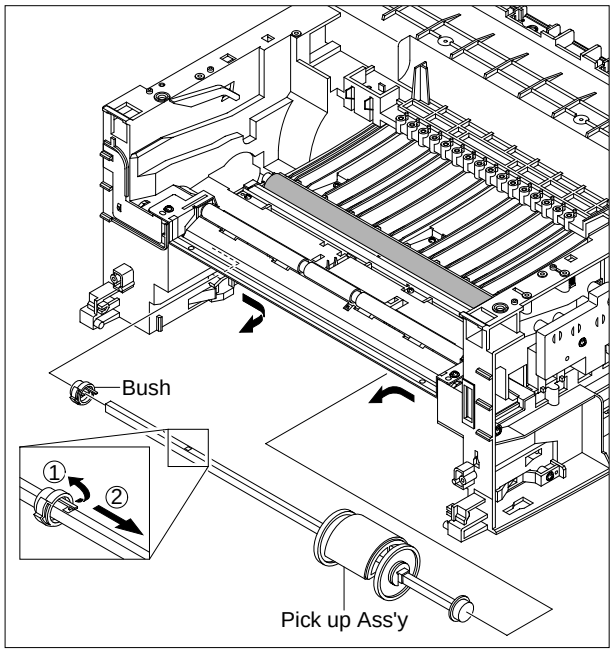

5.27 Solenoid

1. Before you remove the Solenoid, you should remove:
   - Scan Ass'y (see section 5-11)
   - Feed Ass'y (see section 5-25)
   - Pick up Ass'y (see section 5-26)
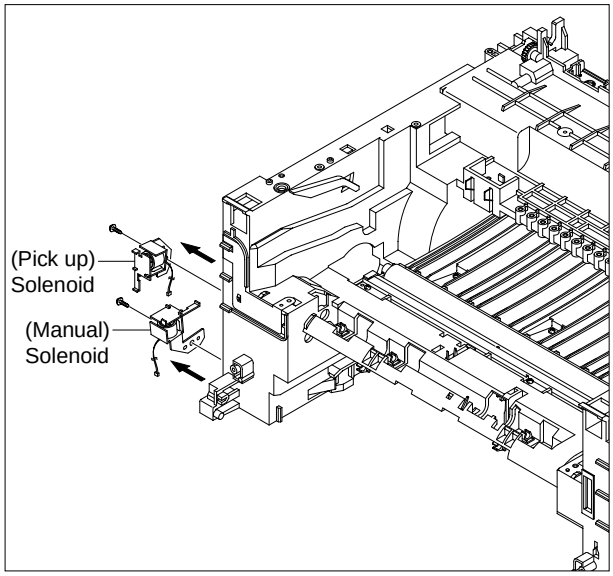
2. Remove the two screws securing the Manual Solenoid and Pick up Solenoid.
   Then remove Manual Solenoid and Pick up Solenoid.